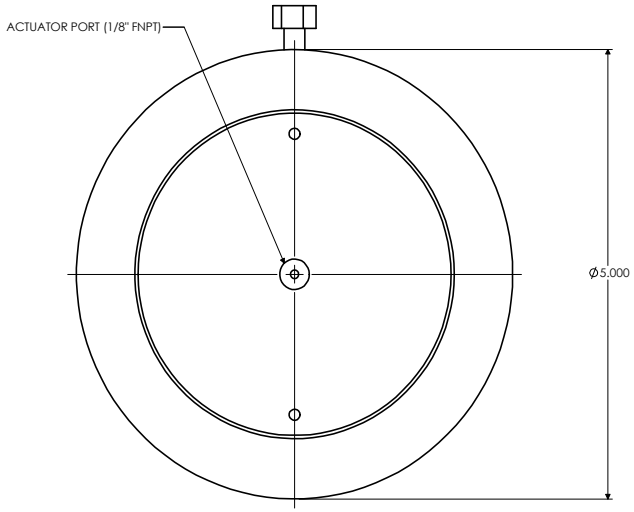

LEFT END VIEW

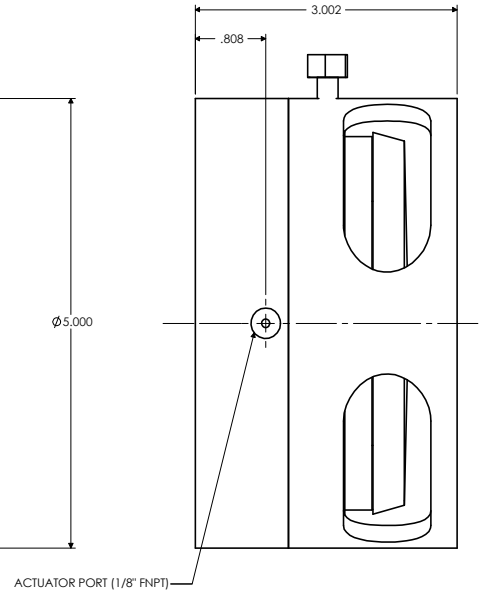

SIDE VIEW

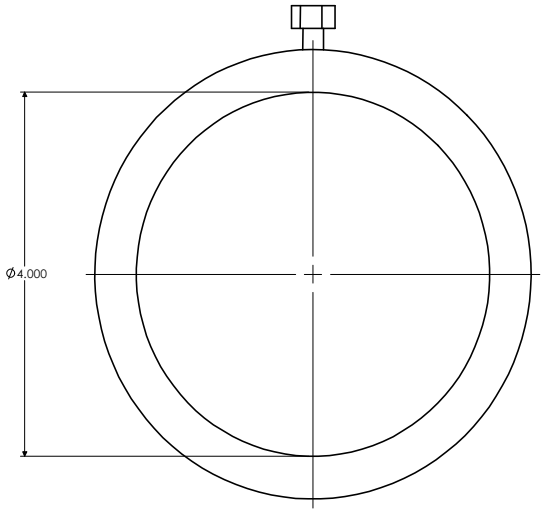

RIGHT END VIEW

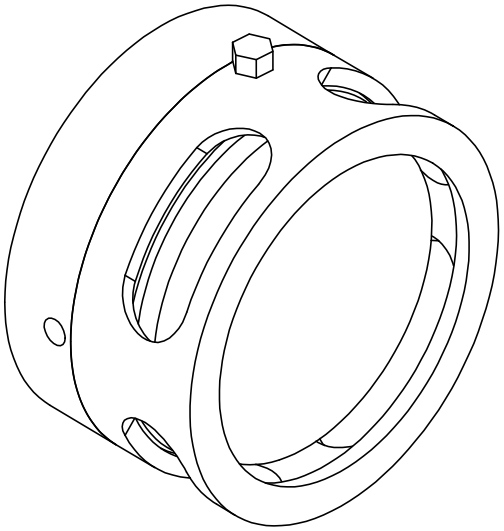

ISOMETRIC VIEW

PART	MATERIAL
BODY	POLYPROPYLENE
END CAP	POLTPROPYLENE
PISTON	POLYPROPYLENE
MOUNTING RING	POLYPROPYLENE
DOOR	POLYPROPYLENE
RETAINER BOLT	POLYPROPYLENE
O-RINGS	VITON

TOLERANCES UNLESS OTHERWISE SPECIFIED

ALL DIMENSIONS ARE IN INCHES

PATH = E:\CC\DYTEC\QDV400P.DRW

DYTEC

102 COMPASS PT. DR. STE. D.
ST. CHARLES, MO. 63301-4414
(636) 949-5600

QDV-400-POL-V QUICK DUMP VALVE PHYSICAL DIMENSIONS

APPROVAL		DWN BY	MPJ	DATE 2/17/00	SCALE 1=1	CHKD BY	
ENG	DATE	SHEET					
QA	DATE	1 OF 1		44	00253	30	00